HS SLIDING DOORS

MODERN AND SHOWY SYSTEM OF SLIDING DOORS FOR PATIO AND BALCONY

AVAILABLE ON EUROPEAN STANDARD PROFILE 68/78/92MM, IN MANY OPENING CONFIGURATIONS



HARDWARE

HANDLES



DIRIGENT BELCANTO RONDO



FINISHES:

- SILVER
- STAINLESS STEEL
- OTHER FOR REQUEST
- WHITE
- GOLD

VENTILATION STRIP

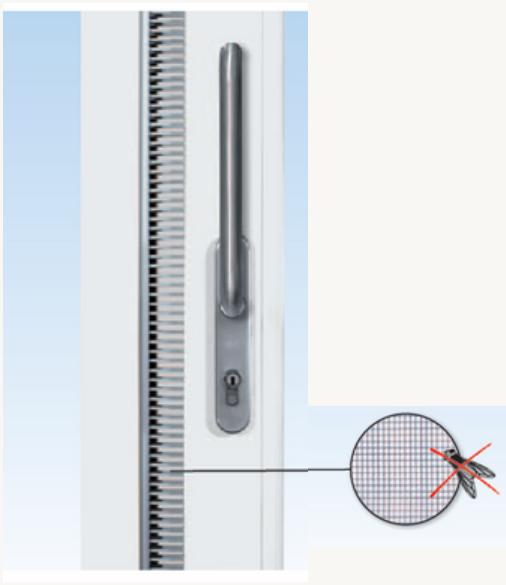



THE VENTILATION STRIP IN HS SLIDING DOOR IS ALWAYS MOUNTED IN THE SIDE JAMB AND COMBINES OPTIMAL VENTILATION COMFORT AND INSECT PROTECTION

OPENING OPTIONS

SCHEME A - LEFT

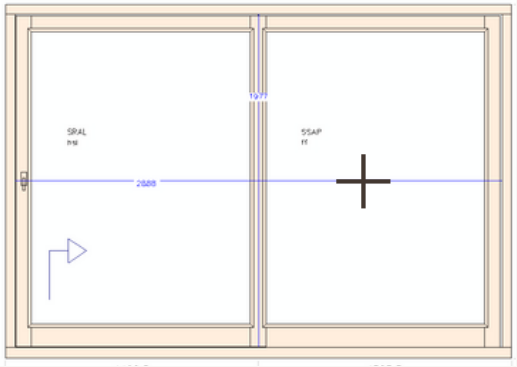

SCHEME A - RIGHT

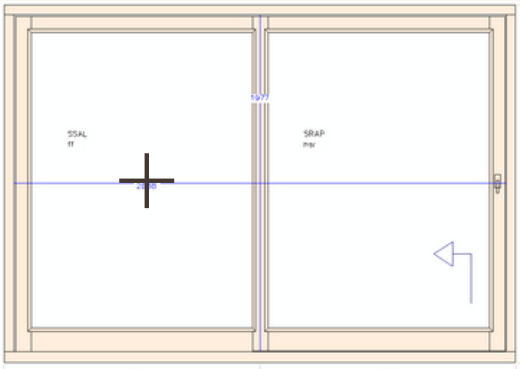

SCHEME D

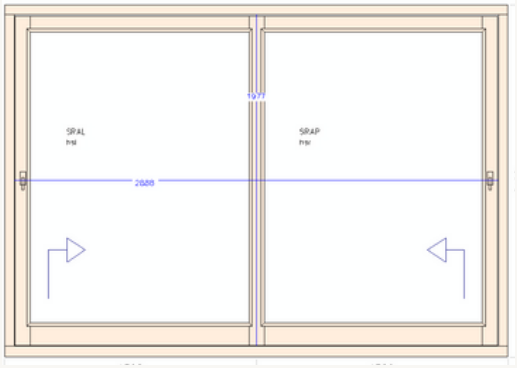

SCHEME E

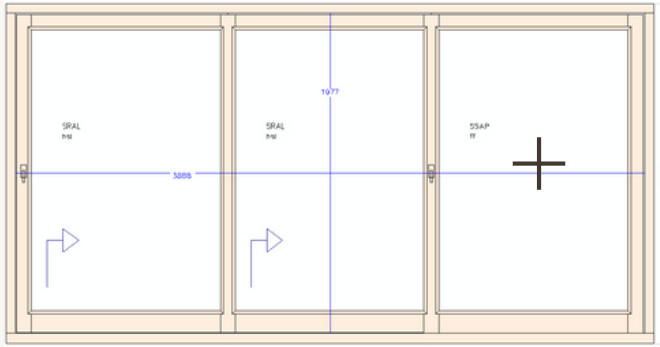

SCHEME C

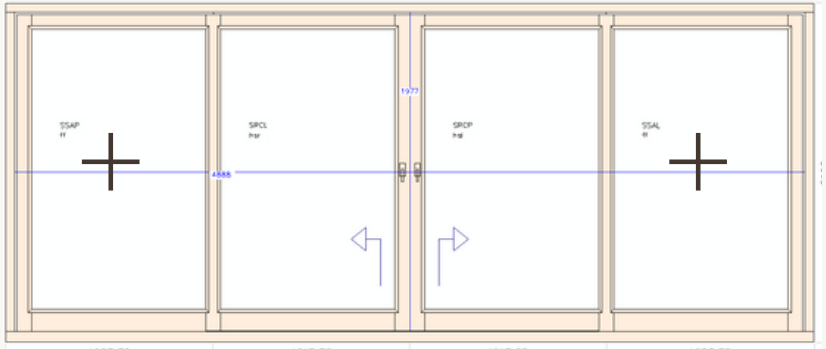

SCHEME F

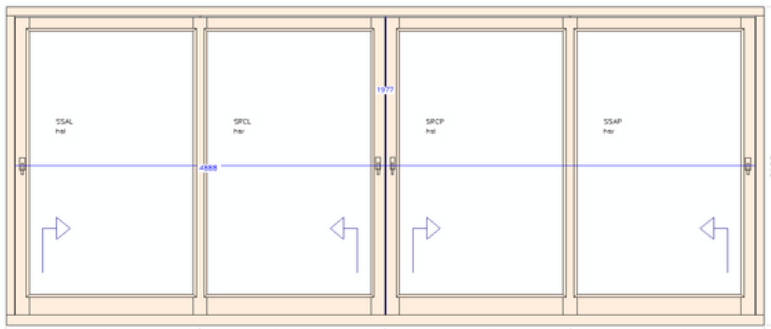

OPENING OPTIONS

SCHEME G1

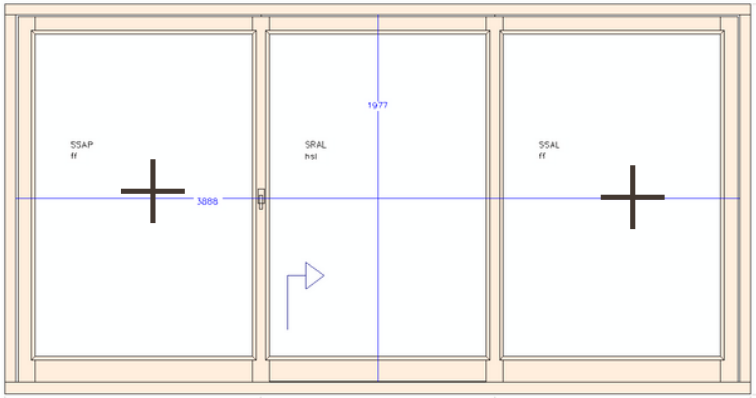

SCHEME H

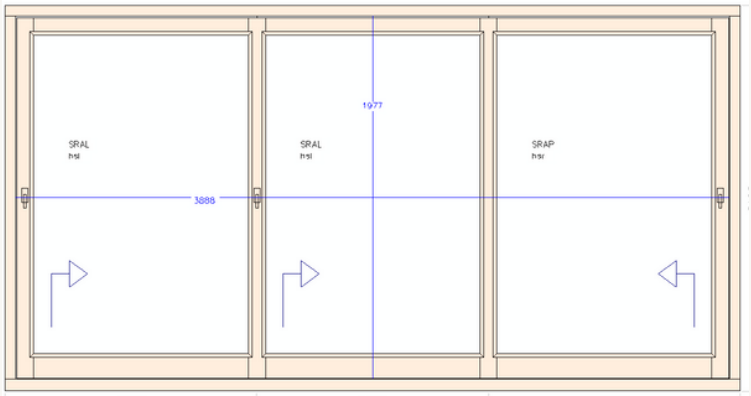

SCHEME K

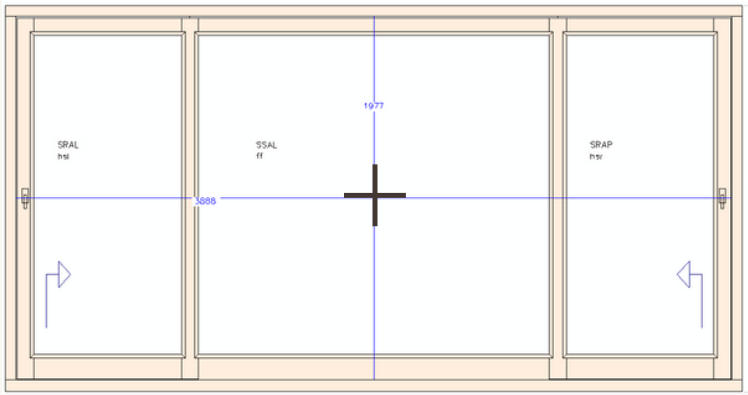

SCHEME L

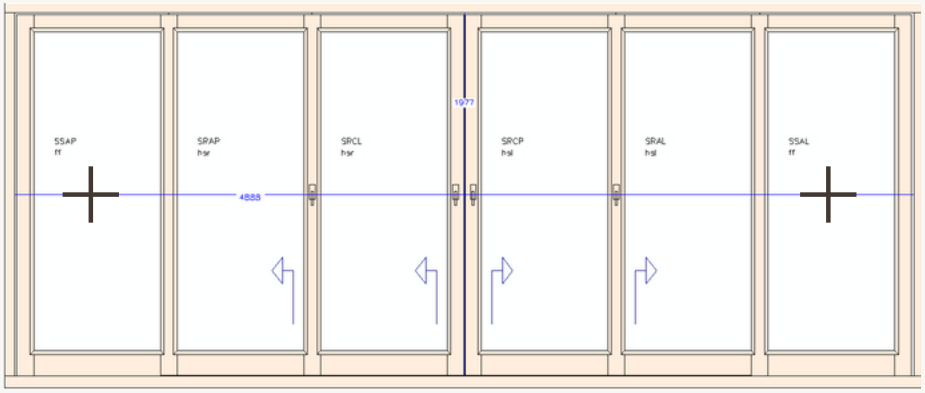

TECHNICAL DRAWINGS

HS - SASH
DEPTH
68/78/92

C-C

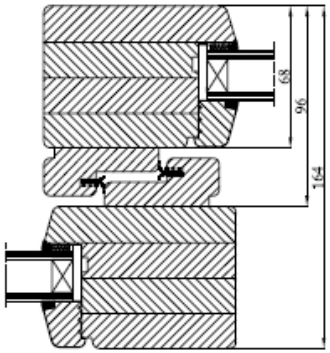

A-A

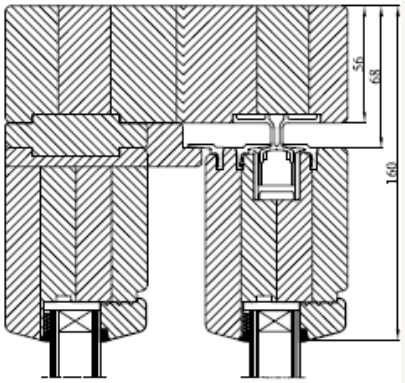

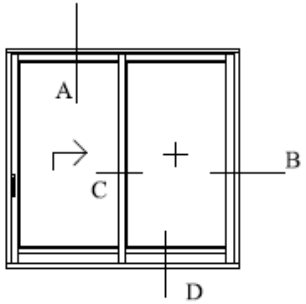

D-D

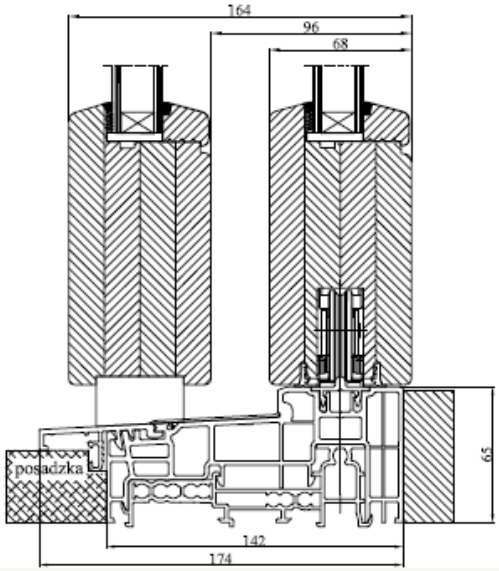

B-B

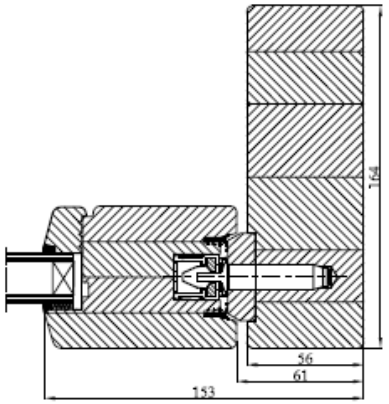

TIMBER CILL
OPTION

